MODEL	DESCRIPTION	WEIGHT - LBS [KG]
L4105A1	174HP (130KW) @ 2100RPM, HEAT EXCHANGED	1390 [630]
L4105A2	220HP (164KW) @ 2250RPM, HEAT EXCHANGED	

*NOTE: WEIGHTS INCLUDE OIL, BUT NO COOLANT.
WEIGHT DOES NOT INCLUDE OPTIONAL VIBRATION ISOLATORS.
VALUES ARE APPROXIMATIONS AND ARE SUBJECT TO CHANGE.
PLEASE CONTACT NLI TO BE SURE YOU HAVE THE MOST CURRENT REVISION.

ITEM	DESCRIPTION	ITEM	DESCRIPTION
1	SEA WATER INLET ∅51 [2.0] H.B.	14	ENGINE OIL FILL
2	HEAT EXCHANGER	15	FUEL RETURN PORT 3/8"-37T
3	COOLANT FILL	16	FUEL SUPPLY PORT 3/8"-37T
4	AFTERCOOLER	17	ENGINE OIL DRAIN PORT M22X1.5
5	WET EXHAUST ELBOW ∅ 127 [5.0]	18	ALTERNATOR
6	ELECTRIC STARTER MOTOR	19	VIBRATION MOUNTS (OPTIONAL)
7	EXPANSION TANK	20	DRY EXHAUST ELBOW (OPTIONAL)
8	THERMOSTAT HOUSING	21	
9	FUEL/WATER SEPARATOR	22	
10	PRIMARY FUEL FILTER	23	
11	OIL FILTER	24	
12	AIR FILTER & COALESCING FILTER	25	
13	ENGINE OIL DIPSTICK	26	

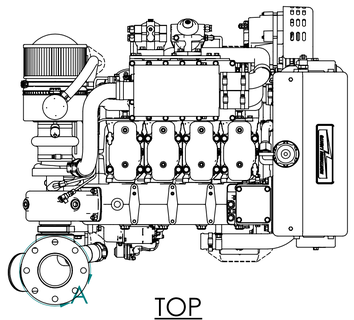

TOP

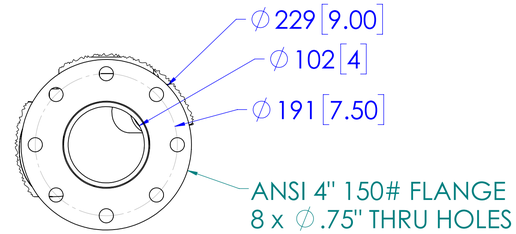

DETAIL A
OPTIONAL DRY EXHAUST FLANGE
SCALE 1 : 4

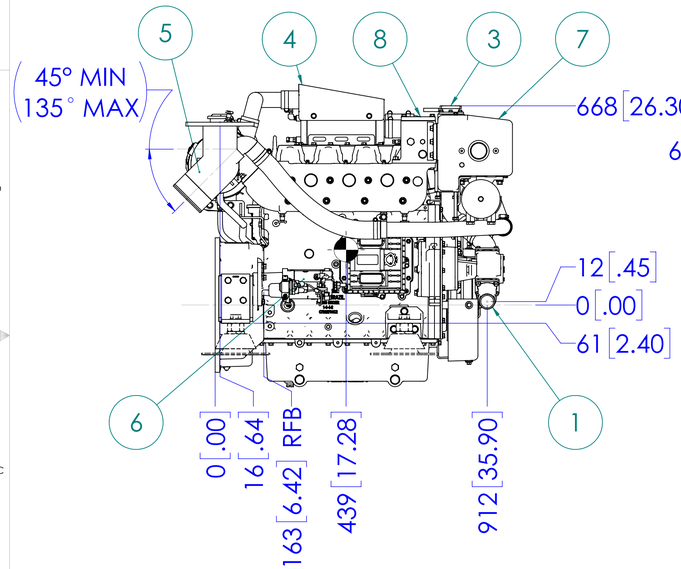

LEFT SIDE

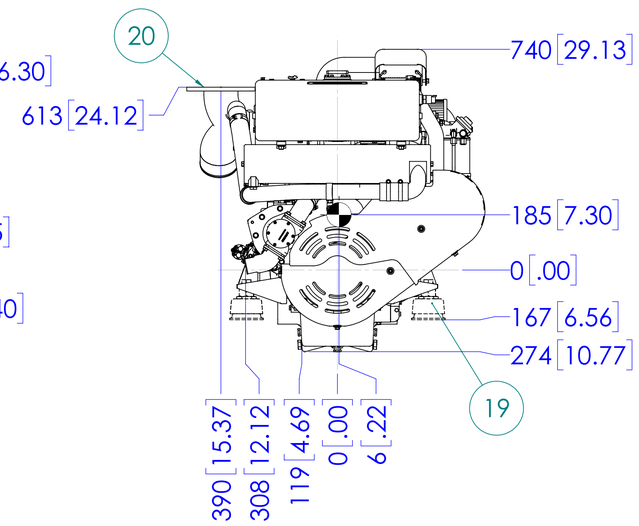

FRONT

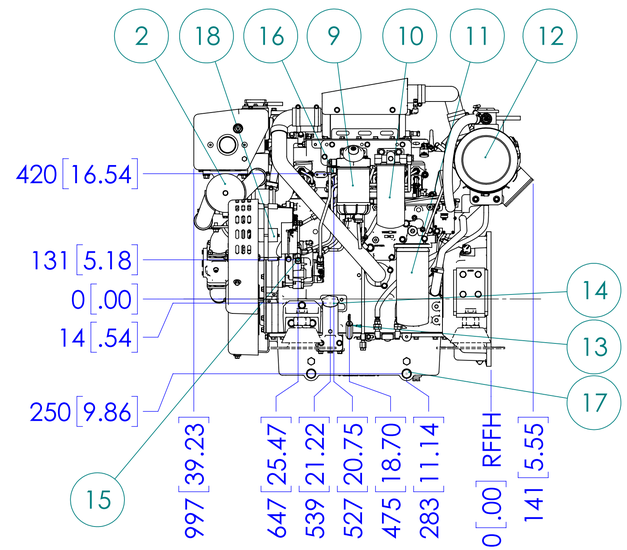

SERVICE SIDE

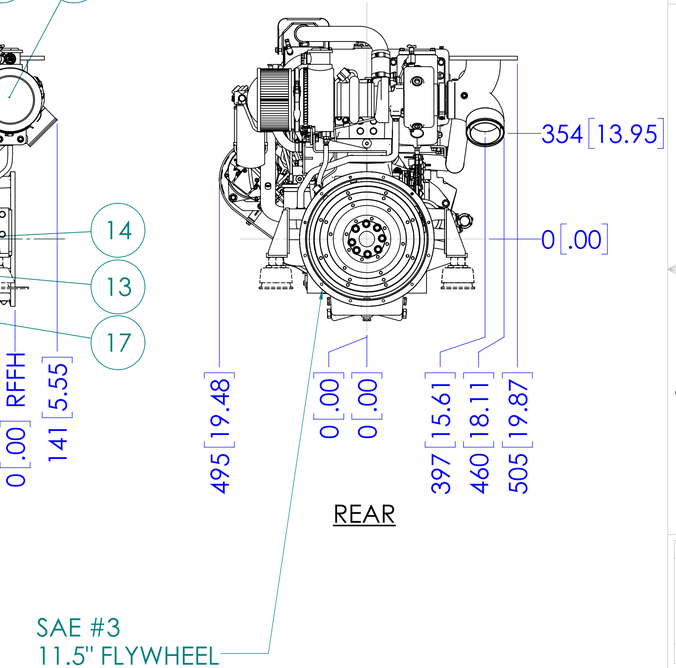

REAR

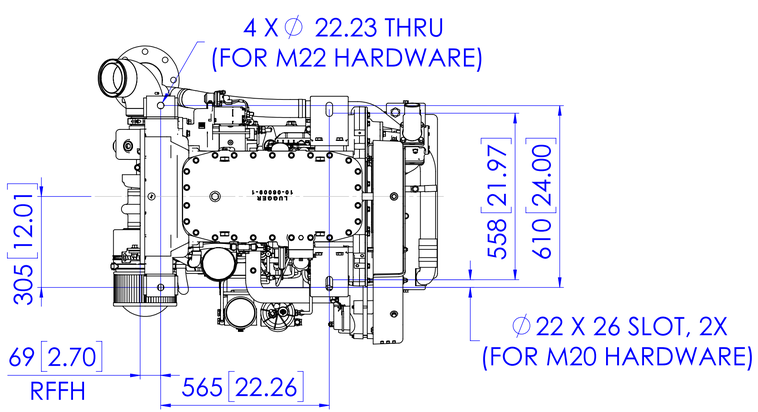

MOUNTING (W/O VIBRATION ISOLATION)

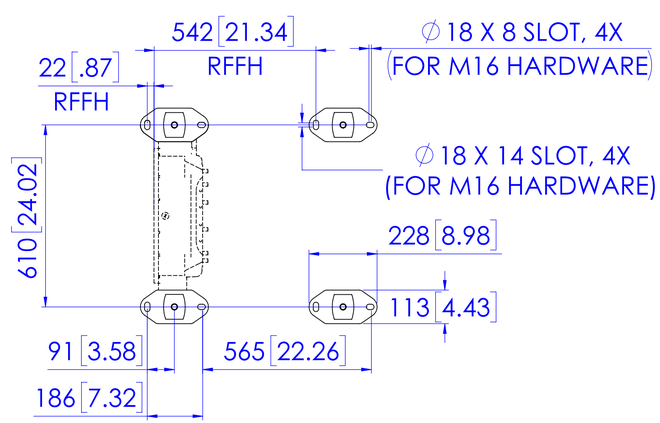

OPTIONAL VIBRATION ISOLATION FOOTPRINT

THIRD ANGLE PROJECTION

PROPRIETARY AND CONFIDENTIAL
THE INFORMATION CONTAINED IN THIS DRAWING IS THE SOLE PROPERTY OF NORTHERN LIGHTS. ANY REPRODUCTION IN PART OR AS A WHOLE WITHOUT THE WRITTEN PERMISSION OF NORTHERN LIGHTS IS PROHIBITED.

UNLESS OTHERWISE SPECIFIED:
DIMENSIONS ARE IN MILLIMETERS
TOLERANCES:
ANGULAR:
MACH ± 0.5° BEND ± 1.0°
.X ± 0.5
.XX ± 0.3
INTERPRET GEOMETRIC TOLERANCING PER: ASME Y14.5M.
MATERIAL
FINISH
DO NOT SCALE

	NAME	DATE
DRAWN	JPW	7/11/2024
CHECKED	MG	8/13/2024
ENG APPR.		
MFG APPR.		
Q.A.		

COMMENTS:

NORTHERN LIGHTS
4420 14th AVE. N.W.
Seattle, WA 98107
(206) 789-3880
www.northern-lights.com

TITLE: INSTALLATION DIMENSIONS L4105A1,L4105A2

SIZE	PART NO.	DWG. NO.	REV
D	SEE TABLE	D-5577	

SCALE: 1:10 WEIGHT: SHEET 1 OF 1

REV D-5577 D